MICRODash Woodworks

High Performance, Sub 1.5in Form Factor



Remote Driver

MICRODash

MICRODash Series

Warnings

- Risk of fire and electrical shock
- Turn off power at breaker
- Installation requires knowledge of electrical systems and should be installed by a qualified electrician. If not qualified, **DO NOT ATTEMPT INSTALLATION**.

Care Instructions

- Wipe with a soft cloth only
- Always avoid using harsh chemicals and/or cleaners

COMPONENTS

The MICRODash Woodworks comes in three sizes, 6 Cell, 12 Cell and 18 Cell. This fixture requires a remote driver. The fixture fastens to Armstrong Woodworks Ceilings and similar wood slat ceilings using the Woodworks Slat Support. Access from above is required to fasten the Woodworks Slat Support to the slats.

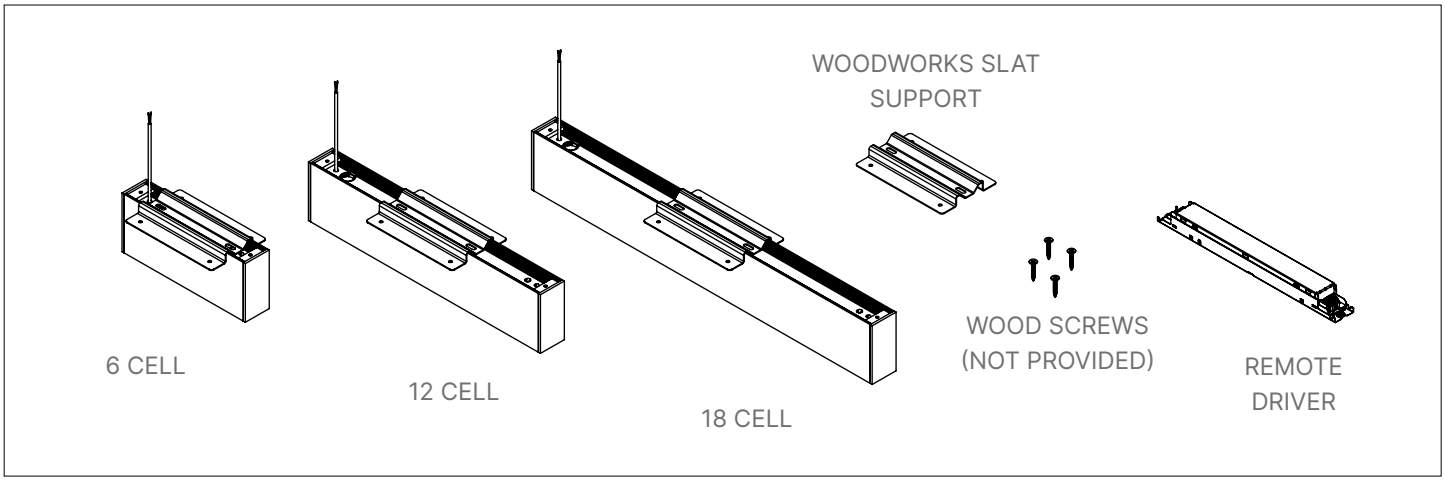

Designed & Built in BOSTON

Declare

Red List Free

STEP 1 — Fixture Location

Place the MICRODash Woodworks fixture between two of the slats of the woodworks ceiling. The Woodworks Slat Support Bracket should sit on the top of the wood slats.

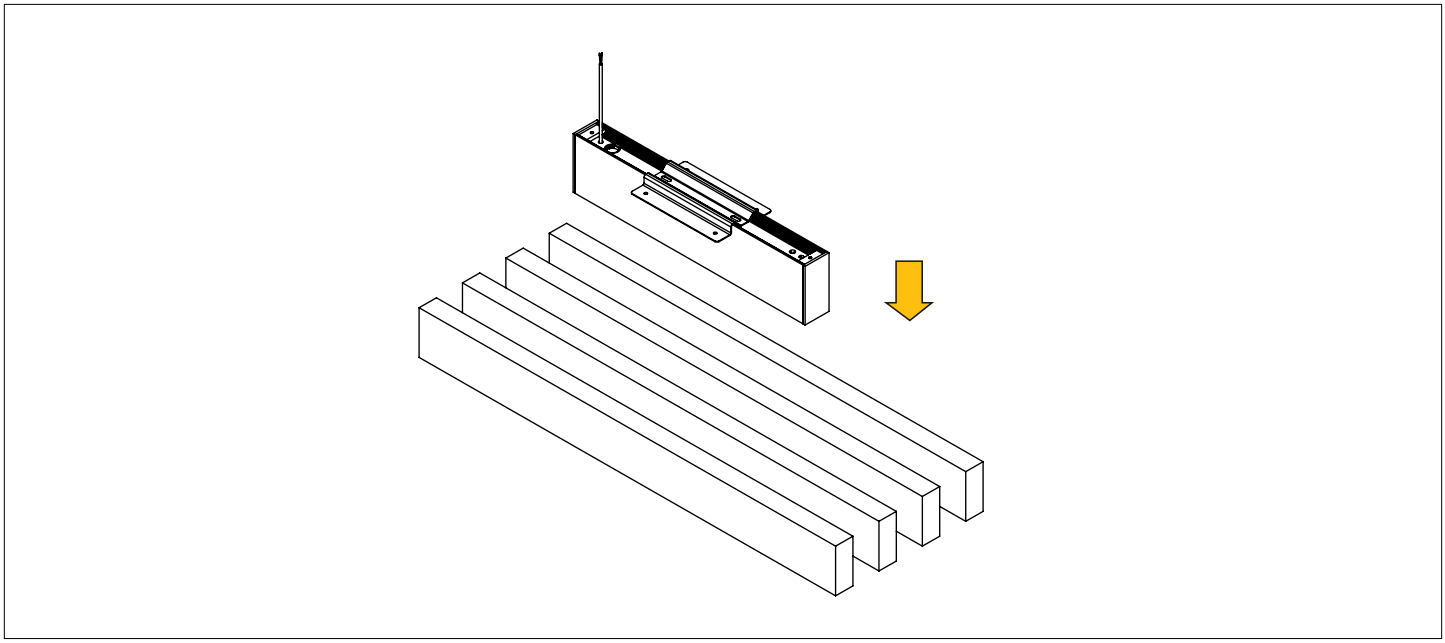

STEP 2 — Install Fixture and Check Alignment

Before fixing the MICRODash in place, ensure that the fixture is spaced evenly between the two wood slats. Use wood screws (not provided) to secure the fixture into the top side of the wood slats.

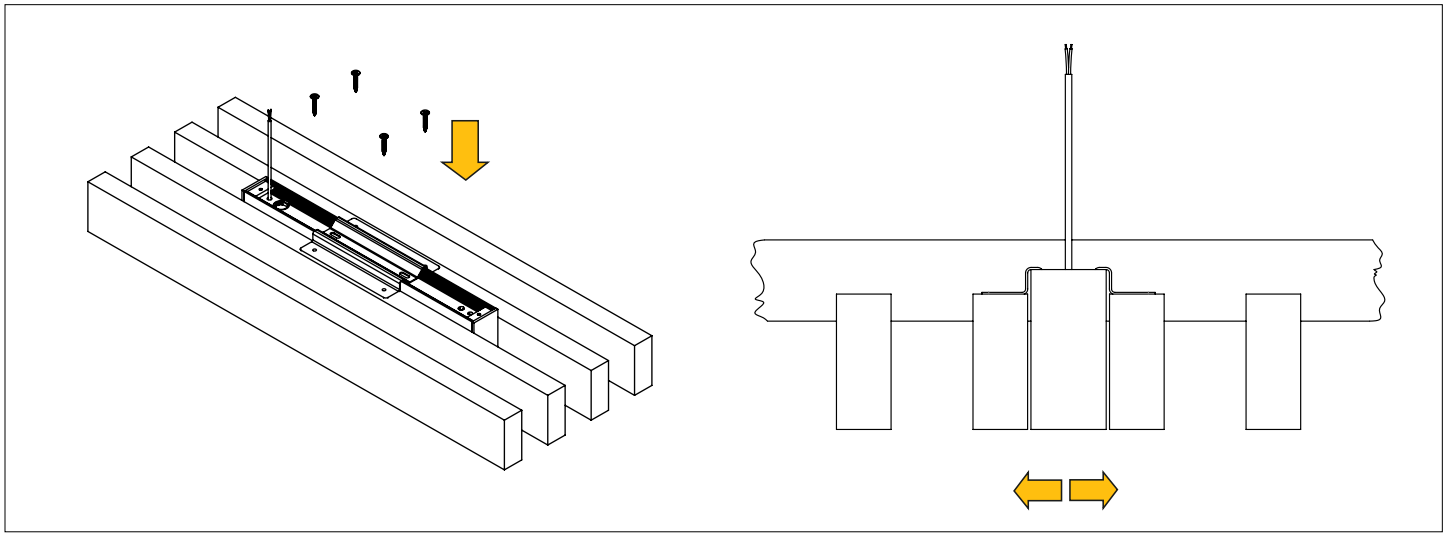

ALTERNATIVE INSTALLATION: STEP 1 — Fixture Location

Attach the MICRODash Woodworks fixture to the ceiling above the woodworks canopy. Align the fixture between two of the slats of the woodworks ceiling. The aircraft cable gripper can be used to raise or lower the fixture on the aircraft cables. Using cables rather than the Woodworks Slat Support must be specified at the time of order.

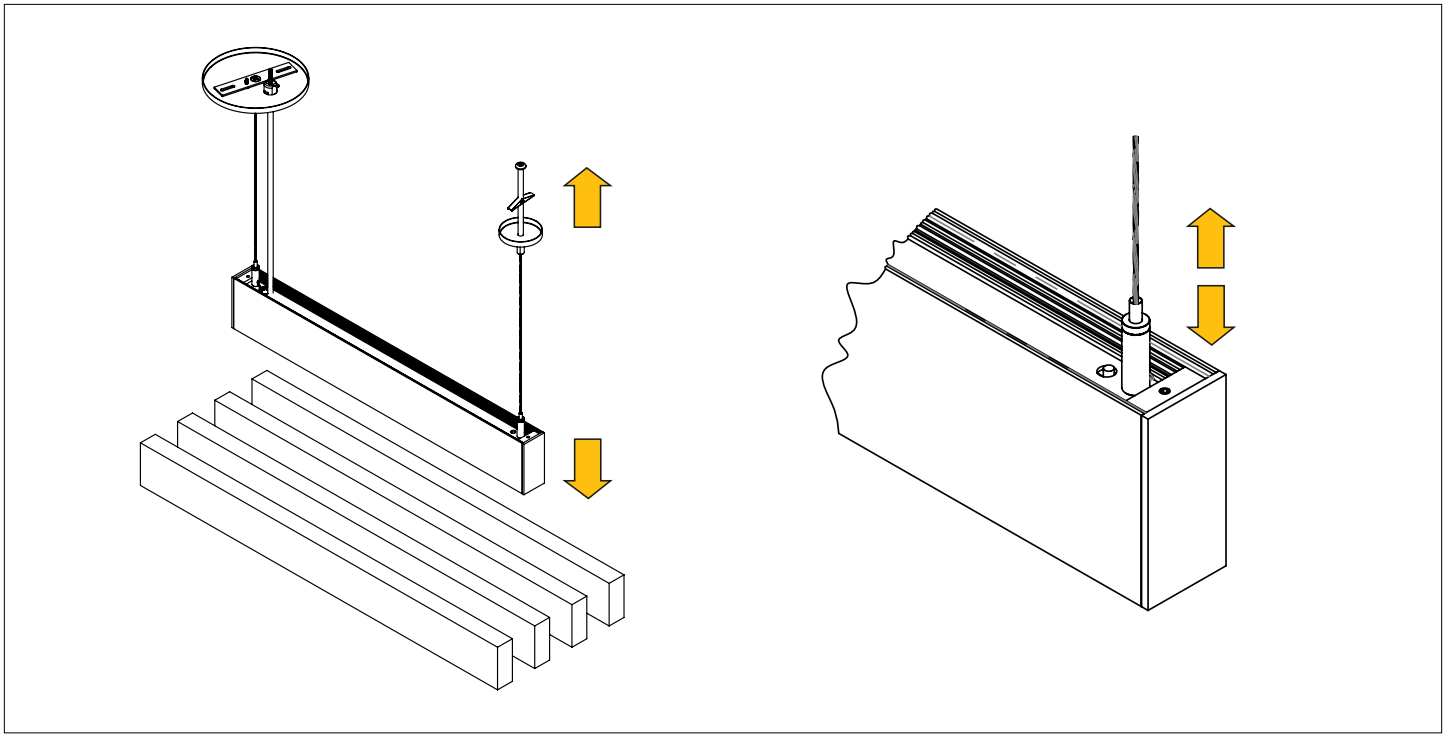

STEP 2 — Install Fixture and Check Alignment

Ensure that the fixture is spaced evenly between the two wood slats.

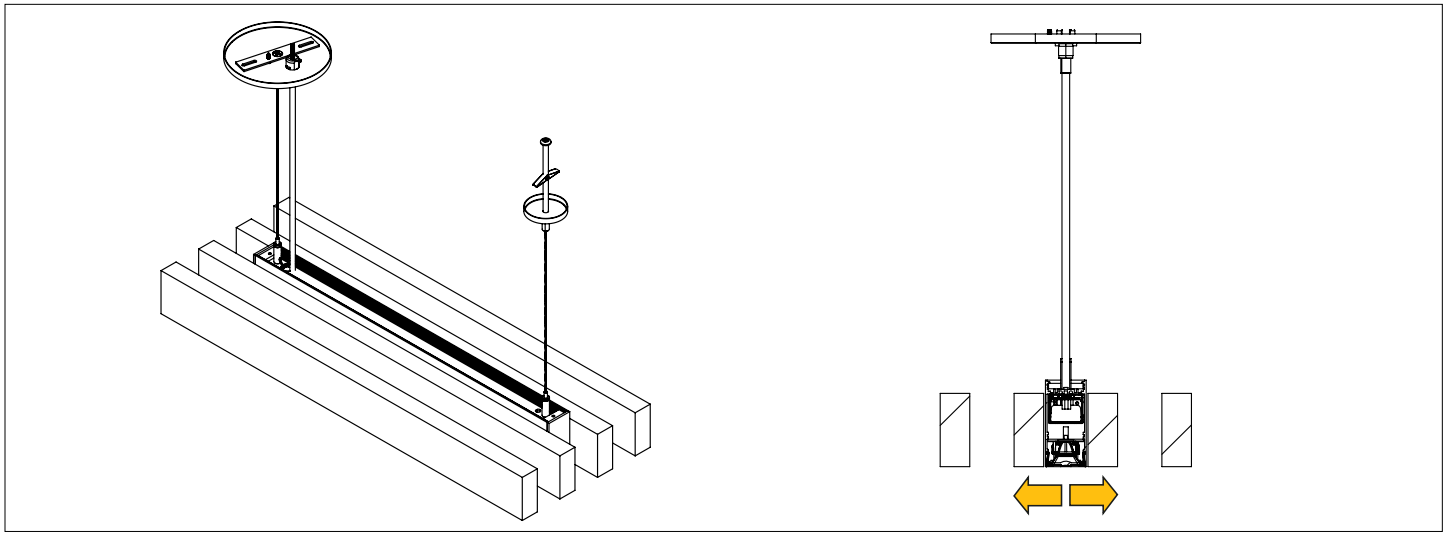

STEP 3 — Install Driver Box

An enclosed Driver Box is provided. Connect the MICRODash fixture to the Driver Box at the appropriate location for your space. If not ordered, you will need to provide a DC Feed from the fixture to the driver box. Refer to the wiring diagram. If you have multiple fixtures or a group installation, your techincal drawing will provide additional wiring information.

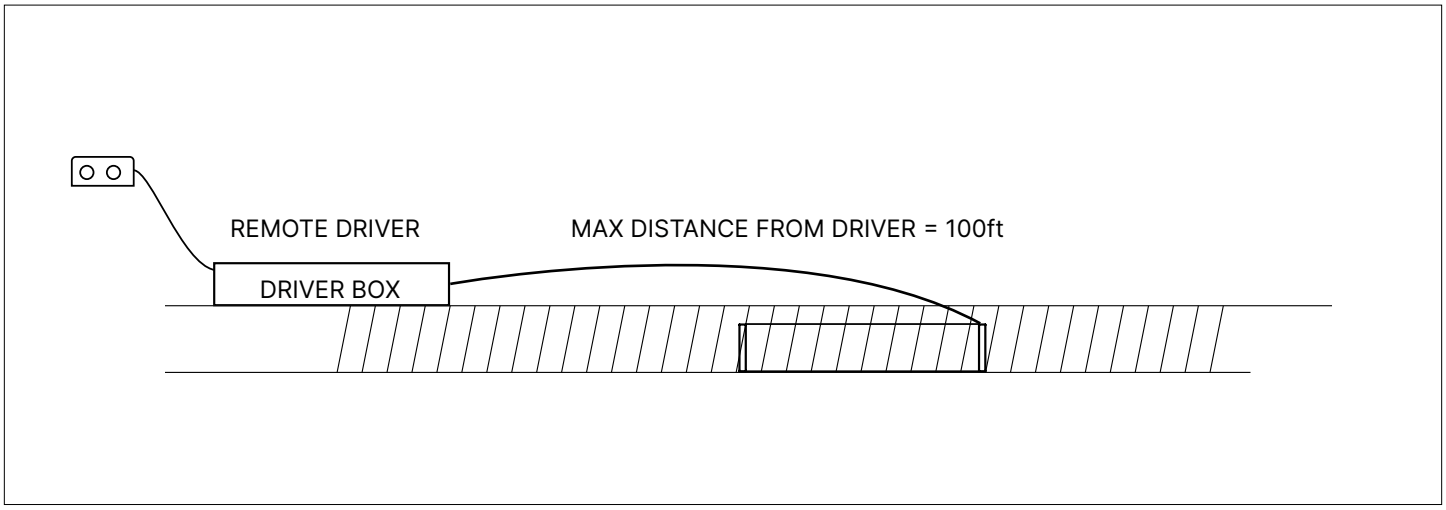

Additional Info

The Woodworks Slat Support is provided based on your order. A unique slat support is used based on the wood slat height being used to allow for the fixture to sit flush to the face of the wood slat.

Driver Boxes can be remotely placed up to 100ft from the fixture.

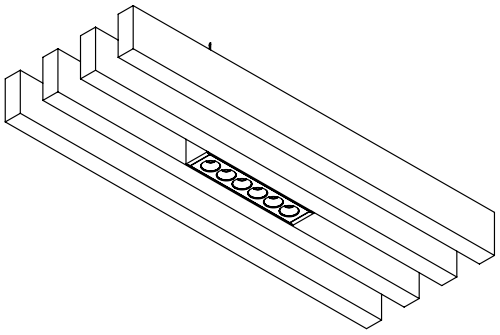

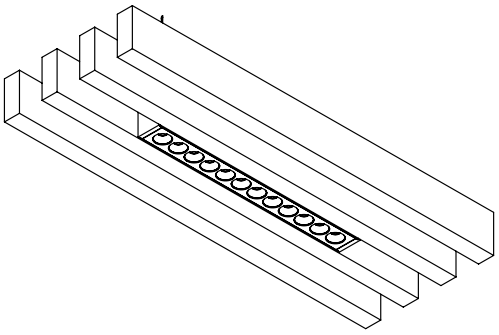

Voltage Drop

24 VDC and Wire Length Chart (Driver to Fixture)

XICO LED Fixture with Remote Drivers

When installing a XICO fixture with a remote driver and the distance is a long way from the fixture, it is important to properly specify the correct wire gauge (AWG/ or thickness of wire) for the distance of wire required. The maximum remote mounting distance is a function of the total voltage-drop across the output of the LED Driver.

How to Use the Chart

Step 1: Calculate the total wattage of the LED lighting system (round up to the nearest 10 W).

Step 2: Find the wattage in the top row and follow the column down to maximum length (round up) of wiring between the LEDs and the power supply.

Step 3: Look to the left column for the wire gauge size required to prevent voltage drop over 3%.

Maximum Cable Length from Remote Driver to Fixture — 24 VDC Driver										
Wire Gauge	Total Fixture Wattage (W)									
	10 W	20 W	30 W	40 W	50 W	60 W	70 W	80 W	90 W	100 W
18 AWG	134 ft	68 ft	45 ft	33 ft	27 ft	22 ft	19 ft	17 ft	15 ft	14 ft
16 AWG	215 ft	109 ft	72 ft	54 ft	43 ft	36 ft	31 ft	27 ft	24 ft	22 ft
14 AWG	345 ft	174 ft	115 ft	86 ft	69 ft	57 ft	49 ft	43 ft	39 ft	36 ft
12 AWG	539 ft	272 ft	181 ft	135 ft	108 ft	90 ft	77 ft	68 ft	62 ft	56 ft
10 AWG	784 ft	397 ft	263 ft	197 ft	158 ft	131 ft	112 ft	98 ft	95 ft	82 ft

Remote Driver to Fixture Example

Calculate total load

An 8 ft fixture using 4 W/ft requires a total of 32 W. Round up to the nearest load of 40 W.

Find distance from driver to Load

Let's assume the distance is 40 ft from the driver to the fixture. Round up to the nearest distance of 54 ft.

Choose wire gauge

It's recommended to install 16 AWG wire between the driver and fixture to eliminate noticeable voltage drop.

Designed & Built in BOSTON

Declare

Red List Free